ASSEMBLY INSTRUCTIONS

ITEM NO.: 5-2673-88

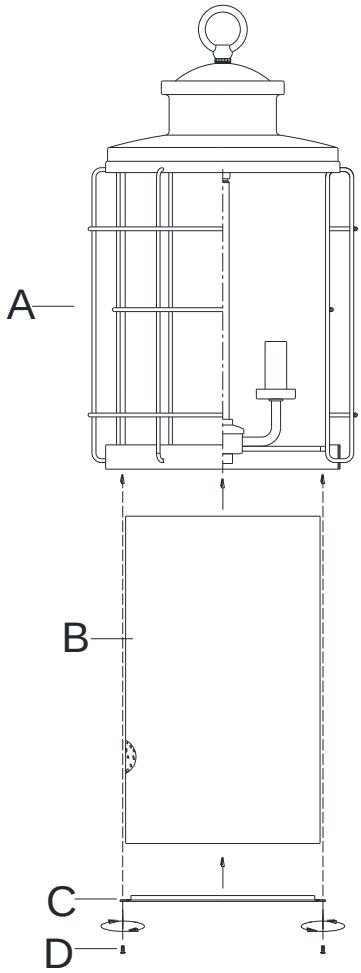

B → A → C → D → Bulb

1. Carefully unpack and identify all parts referring to illustration for parts identification.
2. Turn the power to the installation point OFF.
3. Referring to the installation instruction with the product for the wiring and installation.
4. Install proper bulb (not provided) to the sockets referring to the marking and/or labels on the fixture for maximum wattage.
5. Carefully aligning the glass shade (B) and groove of the steel ring (C) to the coupling at the bottom of the fixture body (A), then securing screws (D) to the coupling at the bottom of the fixture body (A).
6. Restore the power to the installation point ON.
7. Assembly is completely. Retain this sheet for future reference.